1/16 Slash 4X4 (70054-1) Rear Assembly Exploded View

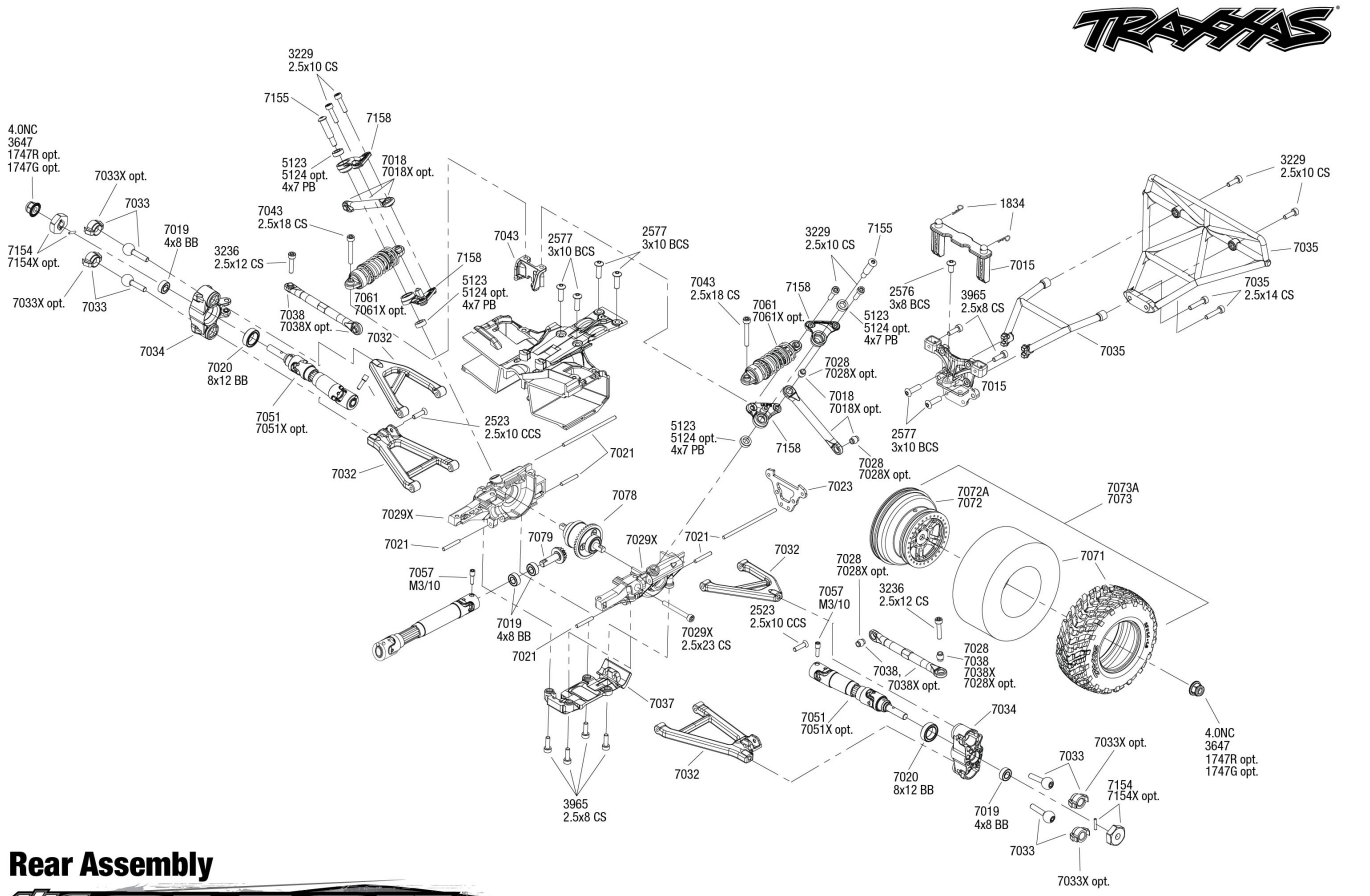

Rear Assembly

1/16 SLASH 4X4

See Parts List for a complete listing of optional accessories.

Specifications on this page are subject to change without notice. Every attempt has been m[illegible] the accuracy of this drawing; however, Traxxas cannot be held responsible for typographica[illegible]

REV 220303-R08

0.0 ★★★★★
No rating available