1/16 Slash 4X4 (70054-1) Transmission Assembly Exploded View

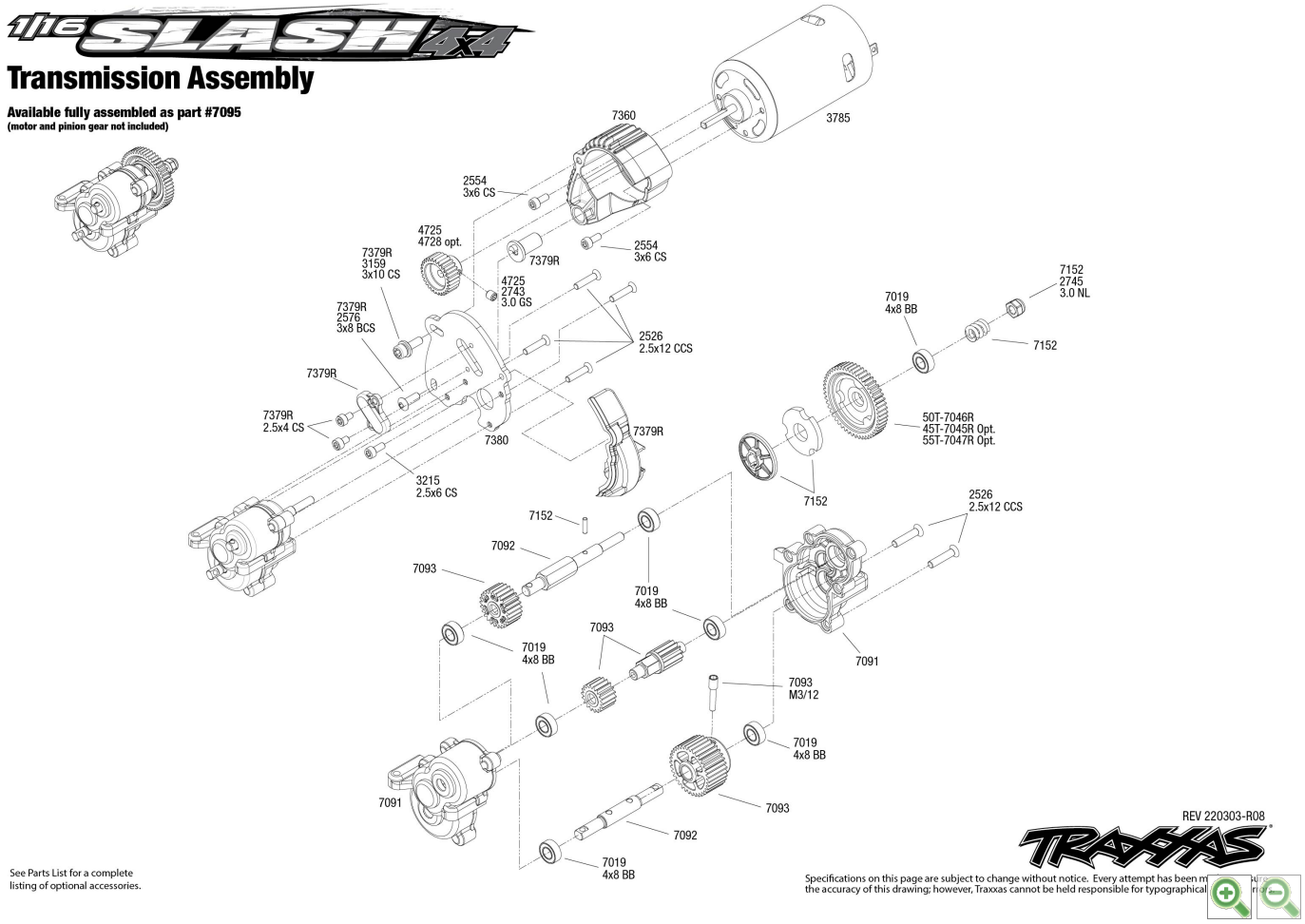

0.0 ★★★★★
No rating available