Unlimited Desert Racer (85086-4) LED Lights Assembly Exploded View

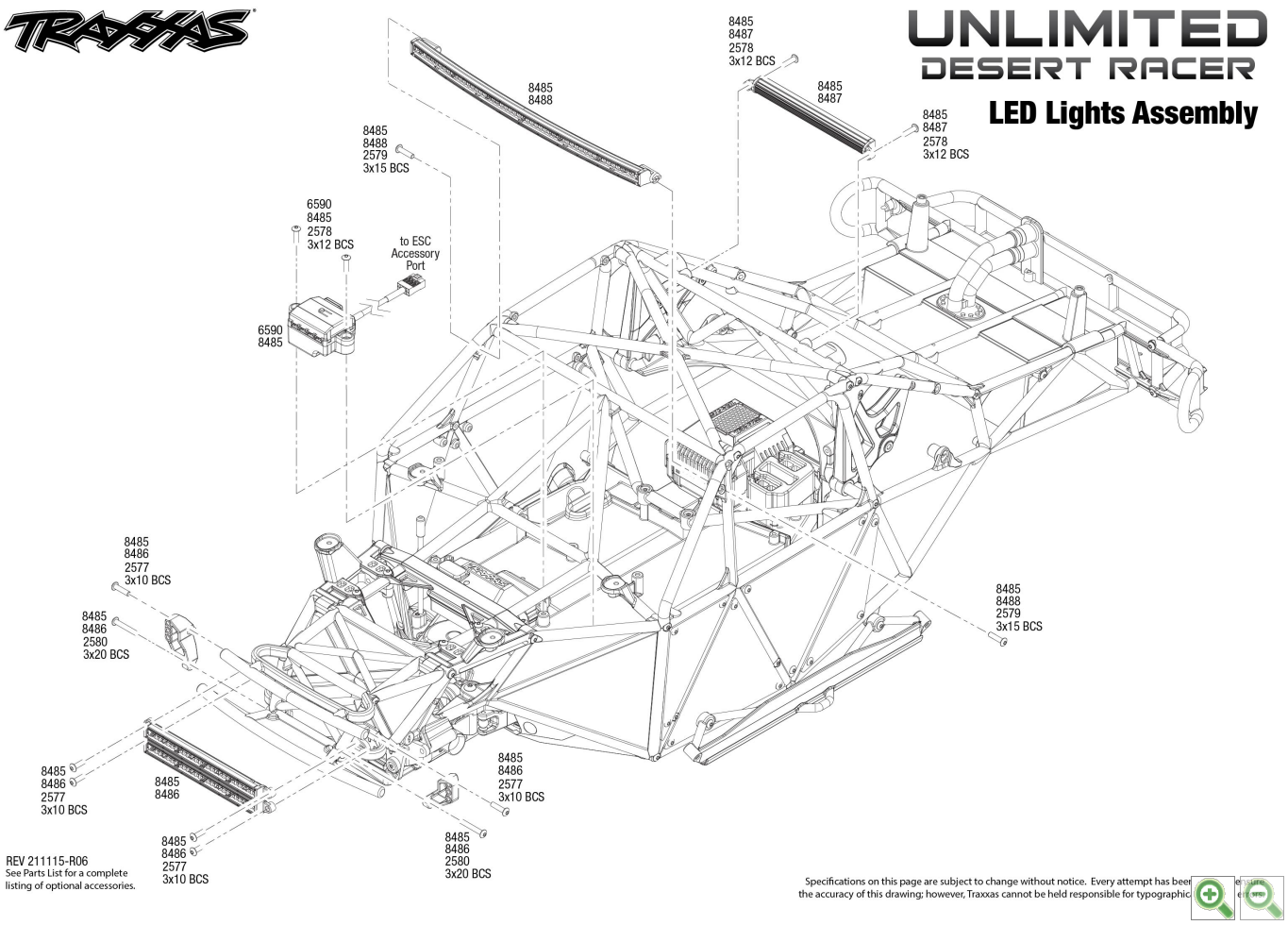

0.0 ★★★★★
No rating available